Package contents (parts are not to scale):

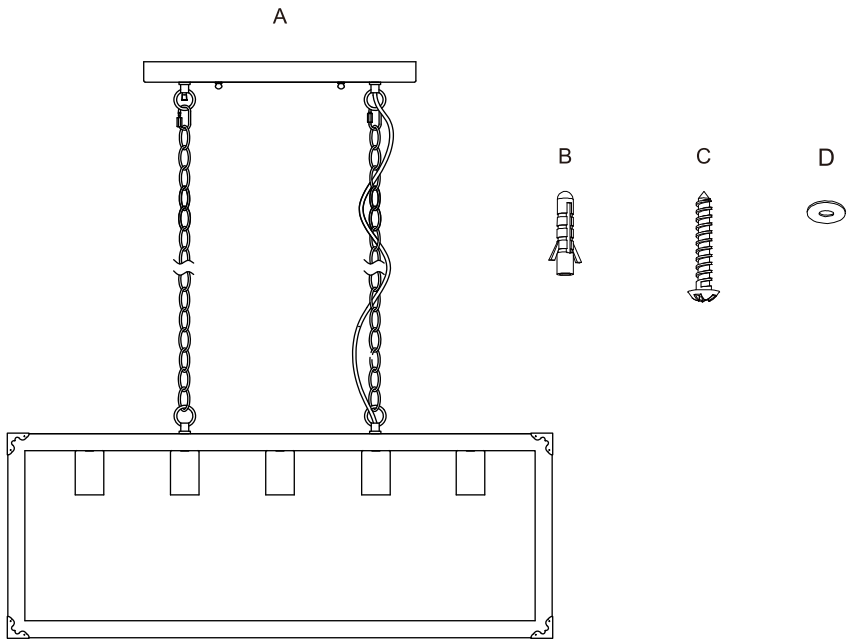

Part	Description	Quantity
A	Fixture body with wire	1
B	Wall expansion particle	2
C	Self-Tapping screw	2
D	Washer	2

Light source

230V E27 5 x 40W (not include)
Recommend LED bulb

Care and Cleaning

EXTERIOR MAINTENANCE

1. To clean the outside of the fixture, use a dry or slightly dampened clean cloth (use clean water, never a solvent) to wipe the surface of the fixture.

2. Do not use any cleaners with chemicals, solvents or harsh abrasives. Use only a dry soft cloth to dust or wipe carefully.

NOVA LIFE

INSTRUCTIONS MANUAL
for LILLEHAMMER TAK LAMPE 5

INTERIOR PANDENT

Art Nr. 53874-075-44

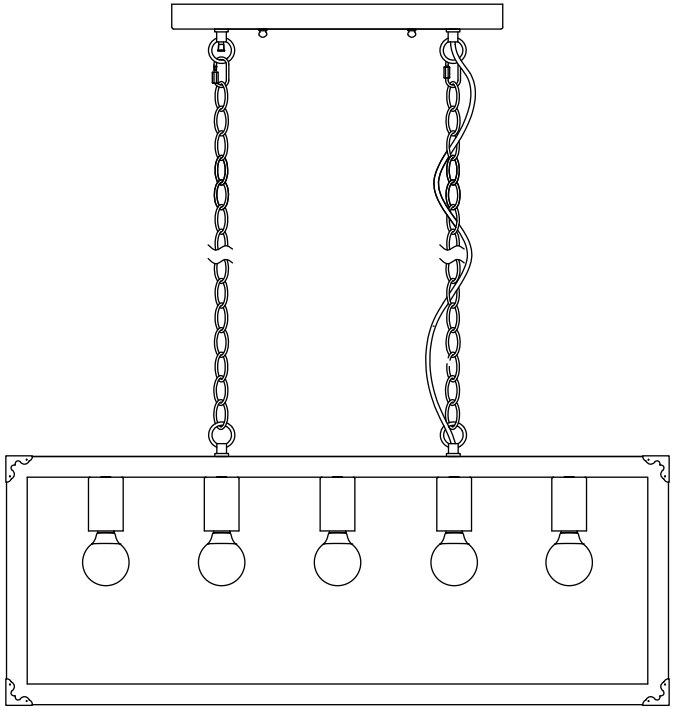

www.lampehuset.no

CAUTION:

NO:
Advarsel:
-Bruk kun pærer som anvist etiketten på lampen.
-Slå av lampen før bytting av pære og vent til pæren er avkjølt. Vis forsiktighet ved berøring av lampen når den er tent. Den kan være varm.

SE:
Varning:
-Använd endast glödlampor enligt anvisningar på lampans etikett.
-Stäng av lampan innan du byter glödlampa och vänta tills lampan har svalnat. Var särskilt försiktig vid beröring av lampan när den är tänd. Det kan vara varmt.

English:
Warning:
-Only use bulbs as directed on the label on the lamp.
-Turn off the lamp before replacing the bulb and wait until the bulb has cooled. Take special care to touch the lamp when the lamp is lit. It can be hot.

Pre-Installation

PLANNING THE INSTALLATION

Read all instructions before assembly and installation. Before starting installation of the fixture or removal of a previous fixture, disconnect the power by turning off the circuit breaker or by removing the fuse at the fuse box. To avoid damaging this product, assemble it on a soft, non-abrasive surface such as carpet or cardboard.

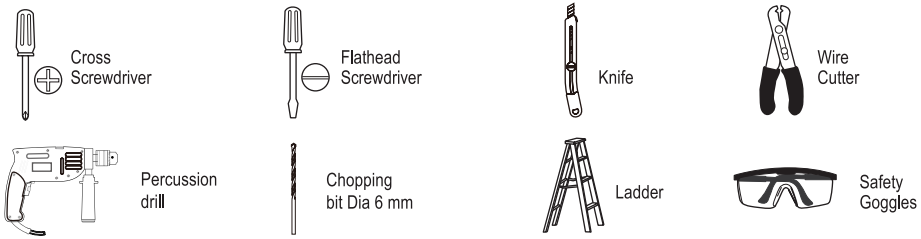

Installation

Step 1.

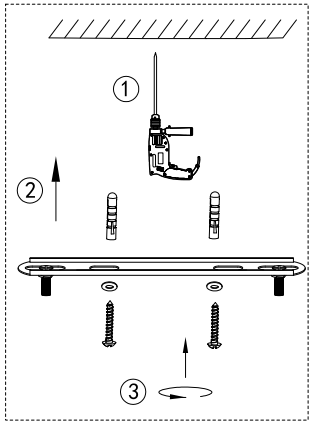

Step 2.

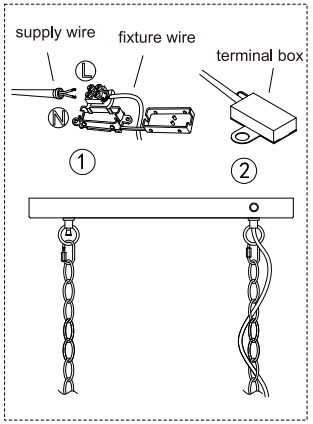

Step 3.

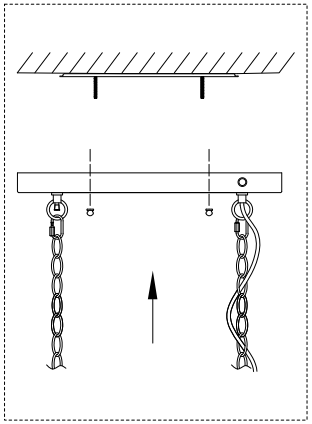

Step 4.

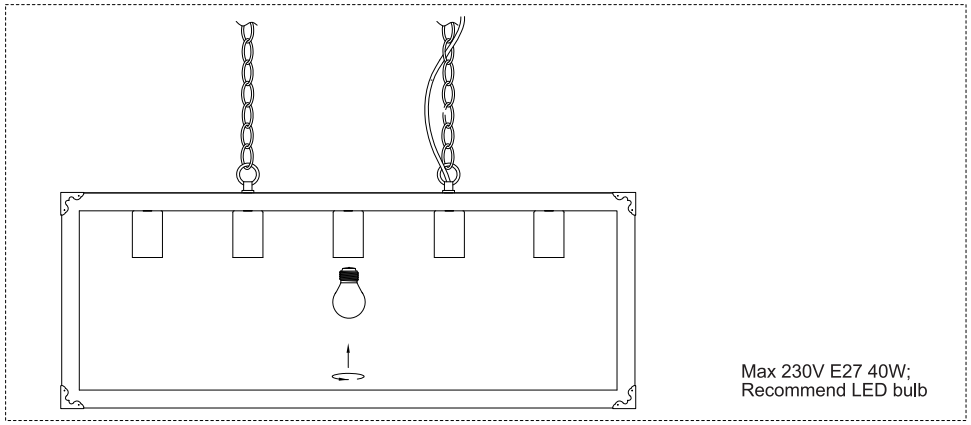

Max 230V E27 40W;
Recommend LED bulb

Installation (continued)

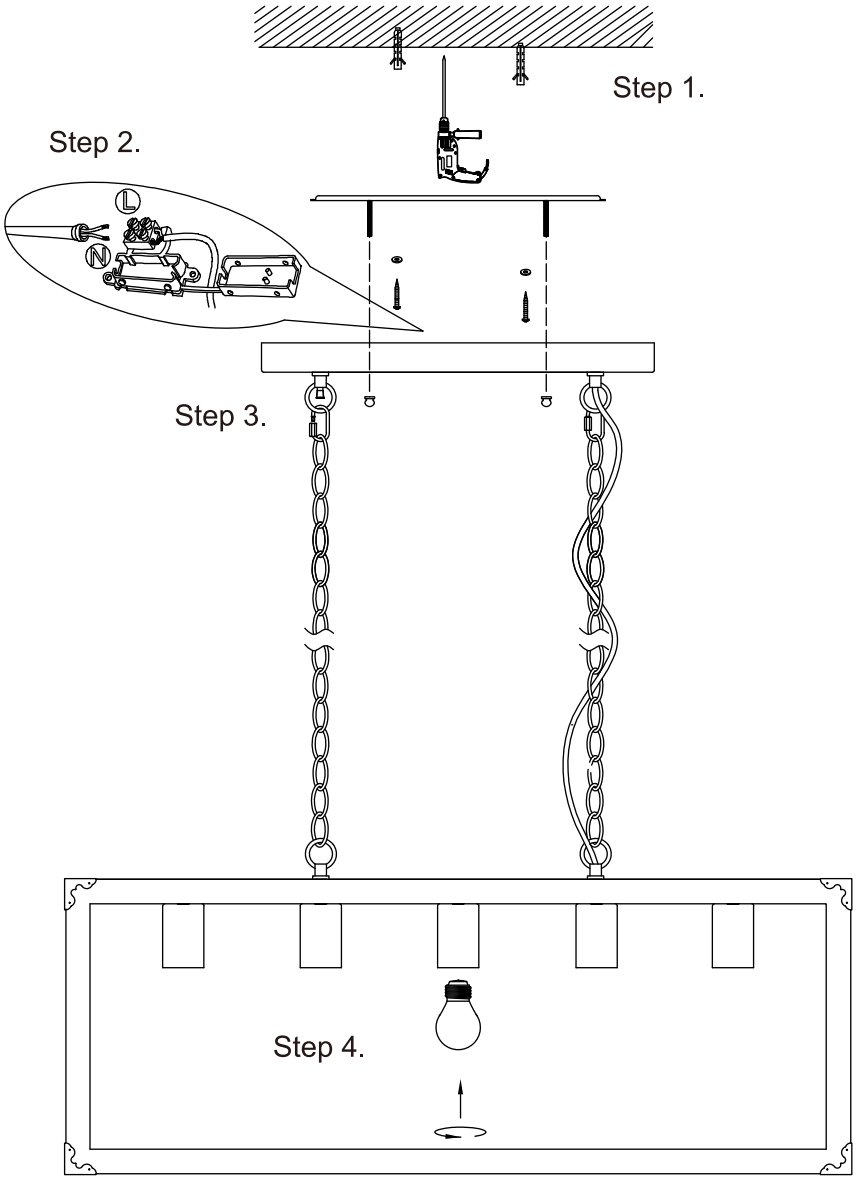

Operation

- ☐ Turn on power at the circuit breaker or fuse box.
- ☐ Turn the light switch on to activate the fixture.