Package contents (parts are not to scale):

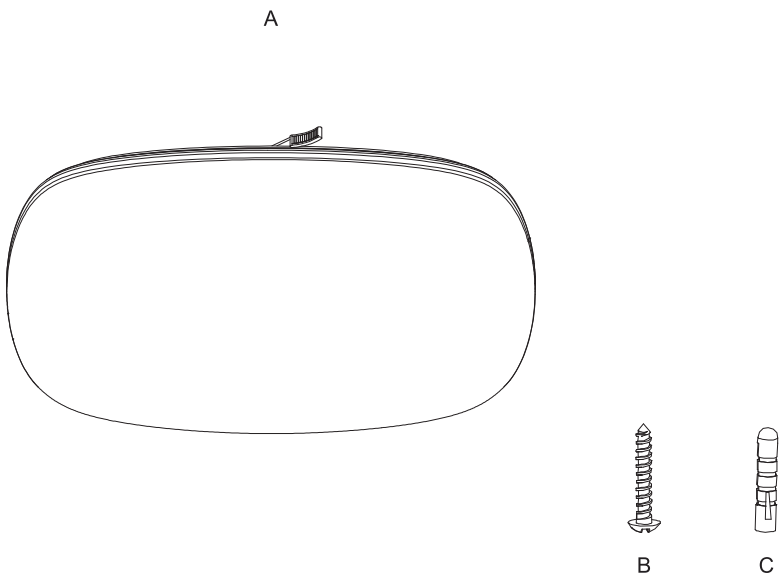

Part	Description	Quantity
A	Fixture body	1
B	SS Self-Tapping screw	4
C	Wall expansion particle	4

Parameters:

Rated Wattage	Rated Voltage	Color Temperature	Lumen (3000 - 6500K)	Life Time	CRI	IP Class	Dimenesion
16W	220-240V	3000K	1200LM	25000H	>80	IP20	300*300*64mm

Care and Cleaning

EXTERIOR MAINTENANCE

1. To clean the outside of the fixture, use a dry or slightly dampened clean cloth (use clean water, never a solvent) to wipe the surface of the fixture.
2. Do not use any cleaners with chemicals, solvents or harsh abrasives. Use only a dry soft cloth to dust or wipe carefully.

GREEN LIGHT®

INSTRUCTIONS MANUAL
for STARLIGHT LED

INTERIOR CEILING LIGHT(IP20)

Art Nr. 57567-030-53

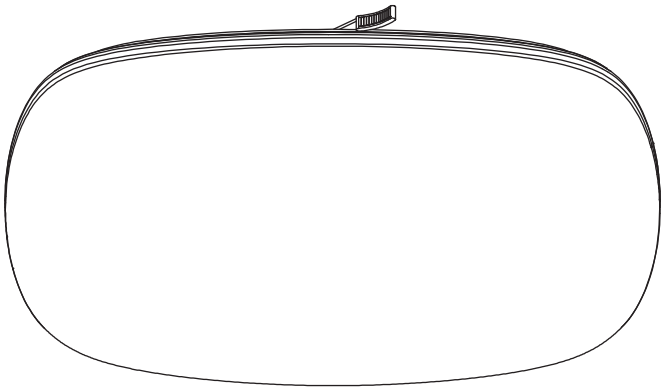

www.lampehuset.no

CAUTION:

The light source of this fixture is not replaceable; when the light source reaches its end of life the whole luminaire shall be replaced.

Pre-Installation

PLANNING THE INSTALLATION

Read all instructions before assembly and installation. Before starting installation of the fixture or removal of a previous fixture, disconnect the power by turning off the circuit breaker or by removing the fuse at the fuse box. To avoid damaging this product, assemble it on a soft, non-abrasive surface such as carpet or cardboard.

TOOLS REQUIRED

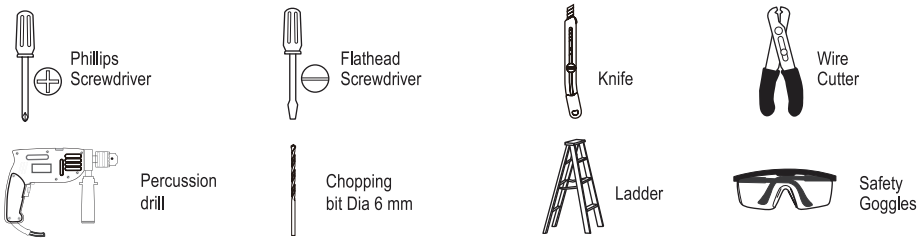

Installation (Make sure to turn off the main power)

Step 1.

Place the luminaire in the desired location and screw to the expansion screws.
Select the required position for the luminaire, to place both expansion particle

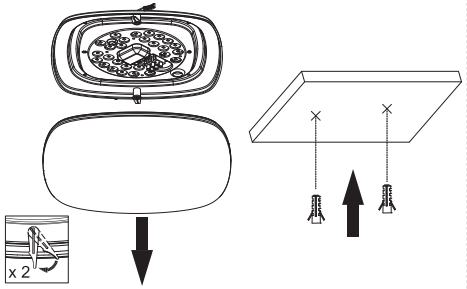

Step 2.

Screw the fixture pan on ceiling.

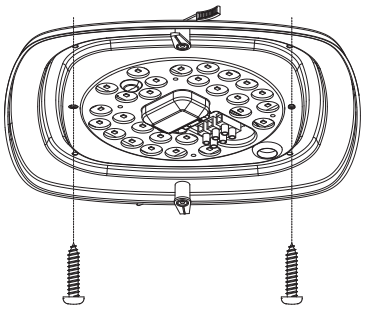

Step 3.

Remove terminal cover by loosening the screws, then connect the power supply wires to the terminal block.

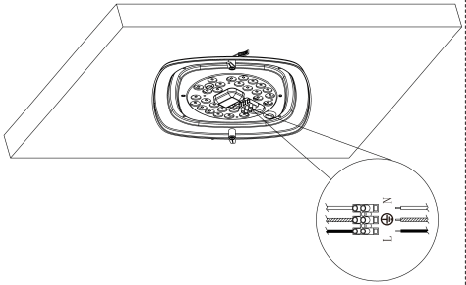

Step 4.

Twist the Fixture cover clockwise to place it back on.
Turn on power to verify it is working correctly.

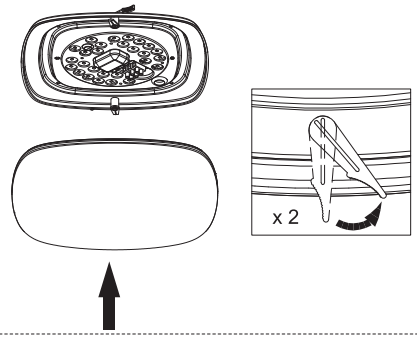

Installation (continued)

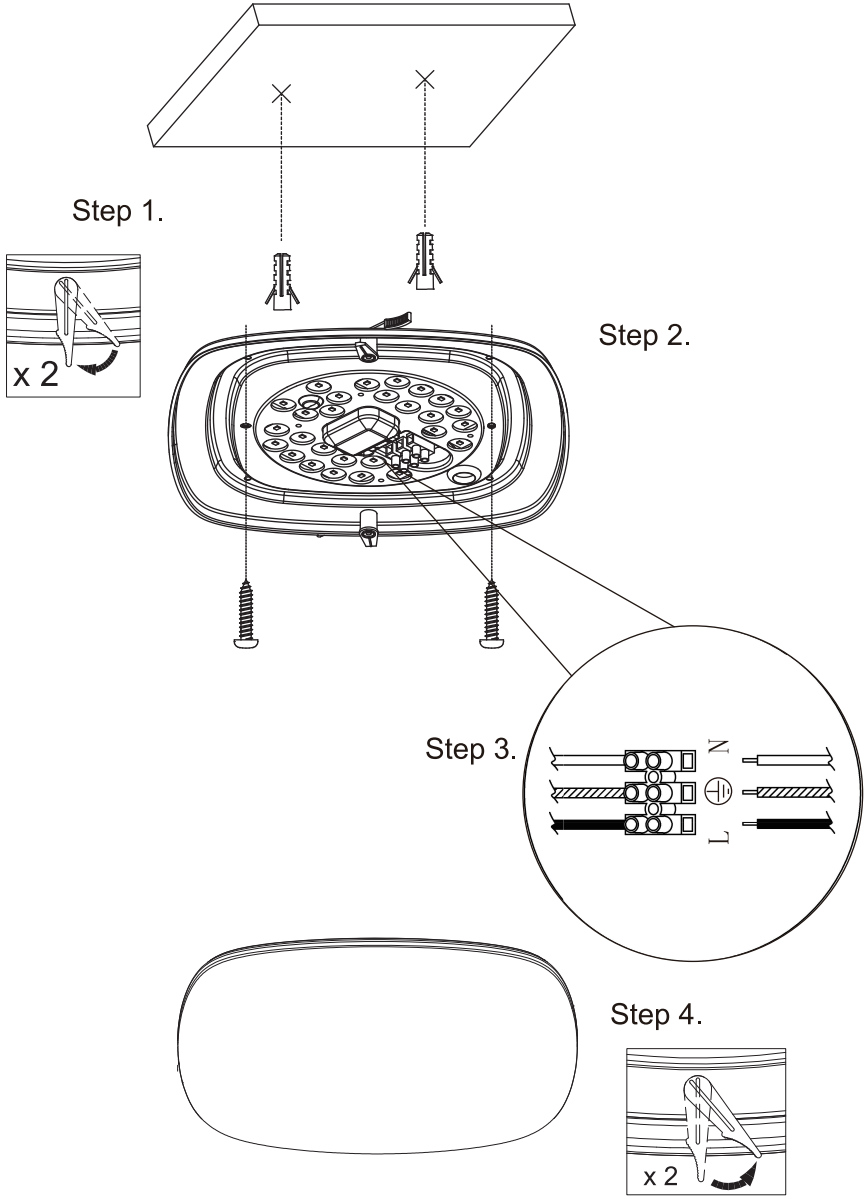

Operation

- ☐ Turn on power at the circuit breaker or fuse box.
- ☐ Turn the light switch on to activate the fixture.